KLS electronic
www.cnkls.com

Cell Box Series

KLS5-812 UM-3 OR "AA" Safety Battery Holder Series

WIRE: UL 1007, # 26 AWG
BLACK & RED: 150 MM ± 5MM
STRIP & TIN: 5 MM ± 1MM
MATERIAL: A. B. S. RESIN, BLACK COLOR
SPRING: .6 MM 65C SPRING WIRE
DESCR.: FOR FOUR "AA" CELLS
WITH COVER & SCREW
SERIES CONNECTION, 6 VOLTS

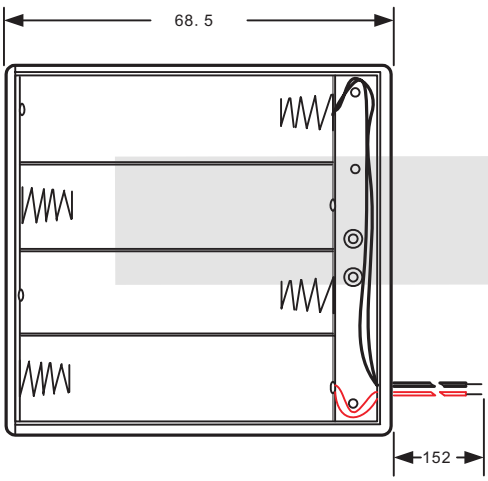

Holder

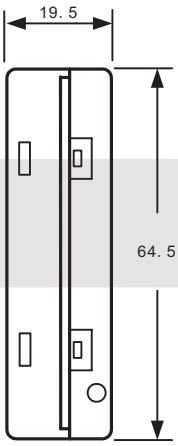

END VIEW

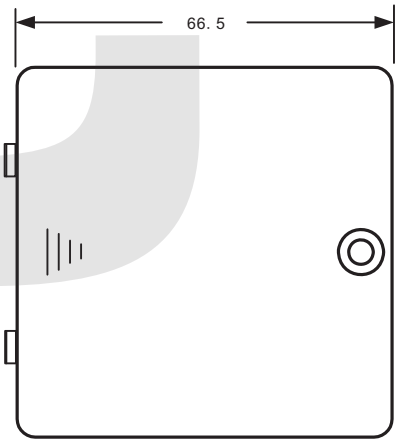

Cover

ORDER INFORMATION

Product NO.: KLS5-812-B

Part Number
Safety Battery Holder Series

TYPE:
B:With Wire And with switch L=15cm or other