KLS electronic
www.cnkls.com

## PLC housing

KLS24-JG3-01-1 115*90*40mm PLC housing, gray

### Product Description:

*Productor Material: ABS
* Widely used in various PLC module circuit, a controller unit, with electrical module
* Product Standard accessories: cap, base, retainer, four screws
* Product side terminal Optional:
  (1) 5.0 unilateral pitch terminal can be equipped with 13, a total of 26 (also available with 14P, just a little tight)
  (2) Pitch 7.62 unilateral terminal can be equipped with nine, a total of 18
* Two installation methods:
  (1) screws
  (2) fast and simple rail mounting
* Fully insulated protection
* Good heat dissipation
* Product color and material batch can be customized
* Product cover may require modification

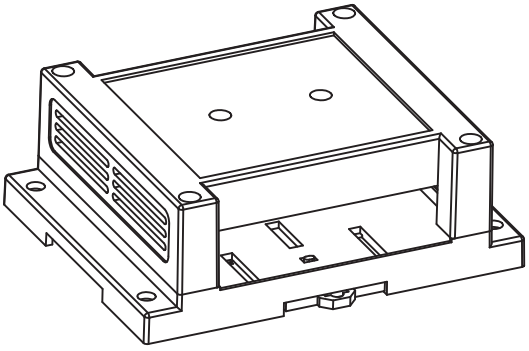

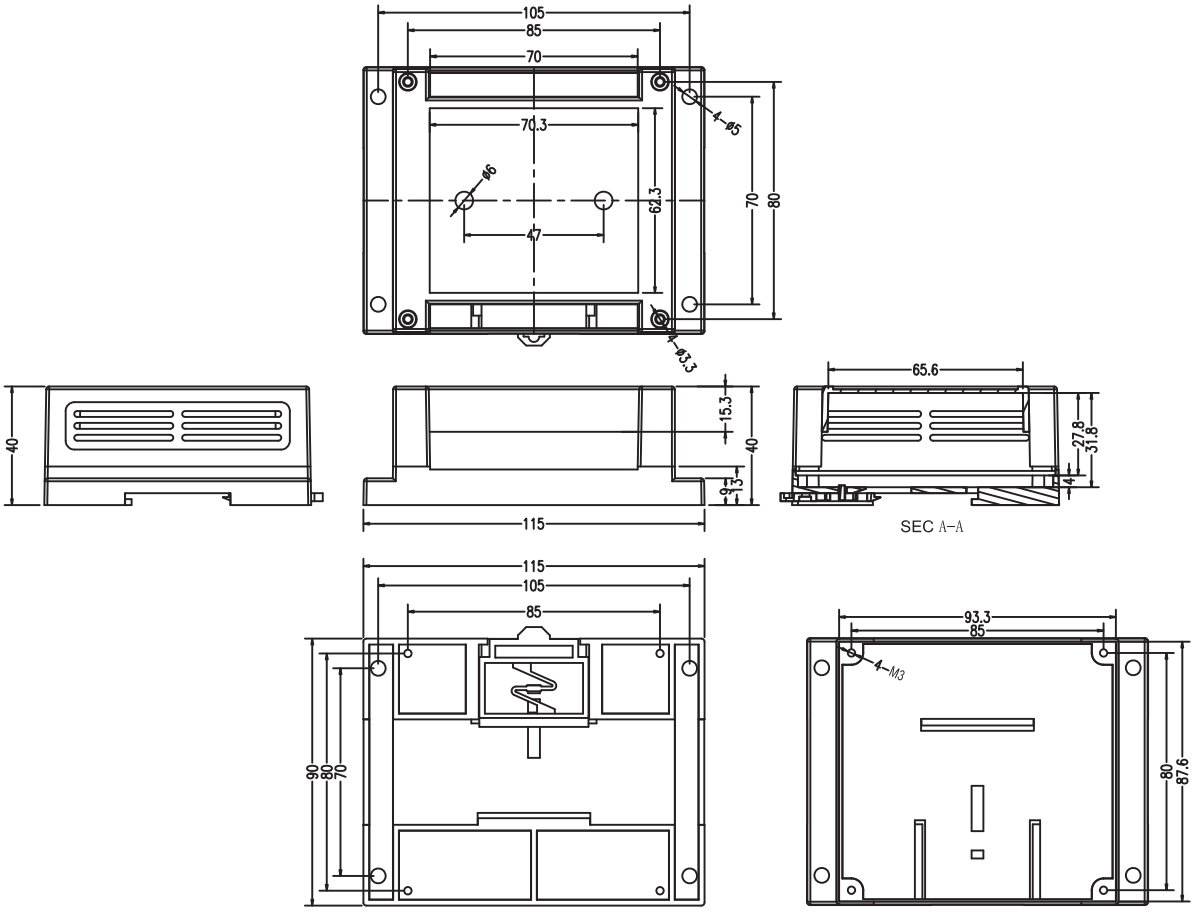


## ORDER INFORMATION

Product NO.: KLS24-JG3-01-1

Pos. NO. — No.