KLS electronic
www.cnkls.com

PLC housing

KLS24-JG3-07 155*110*60mm PLC housing, gray

Product Description:

*Productor Material: ABS
*Widely used in various PLC module circuit, a controller unit, with electrical module
*Product Standard accessories: cover, base, red retainer 2, small cover 2, 4 screws
*Two terminals are available:
(1) on both sides with a pitch of 13 terminals unilateral 9mm, total 26
(2) on both sides with unilateral 7.62mm pitch terminal of 15, a total of 30
*Two installation methods:
(1) screws
(2) fast and simple rail mounting
*Fully insulated protection
*Good heat dissipation
*Product color and material batch can be customized

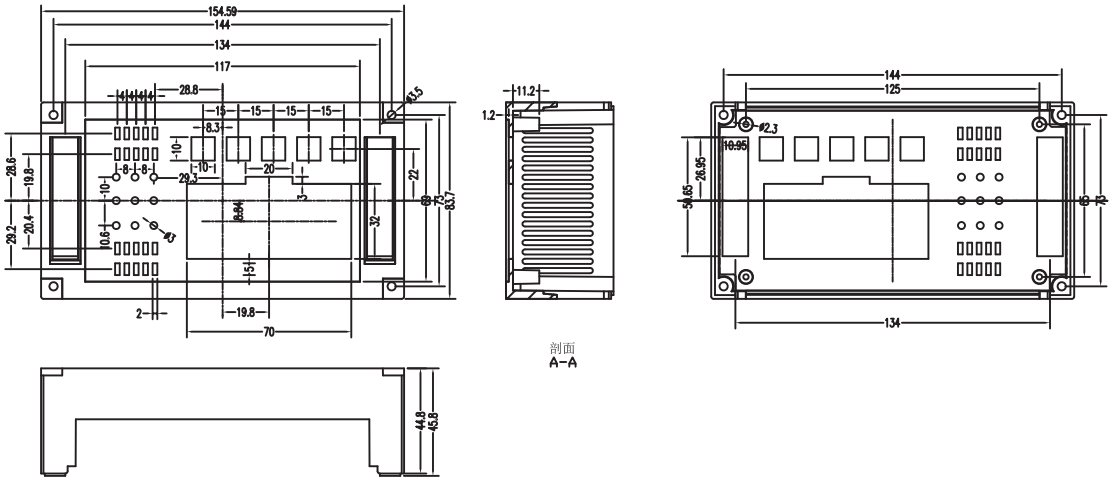

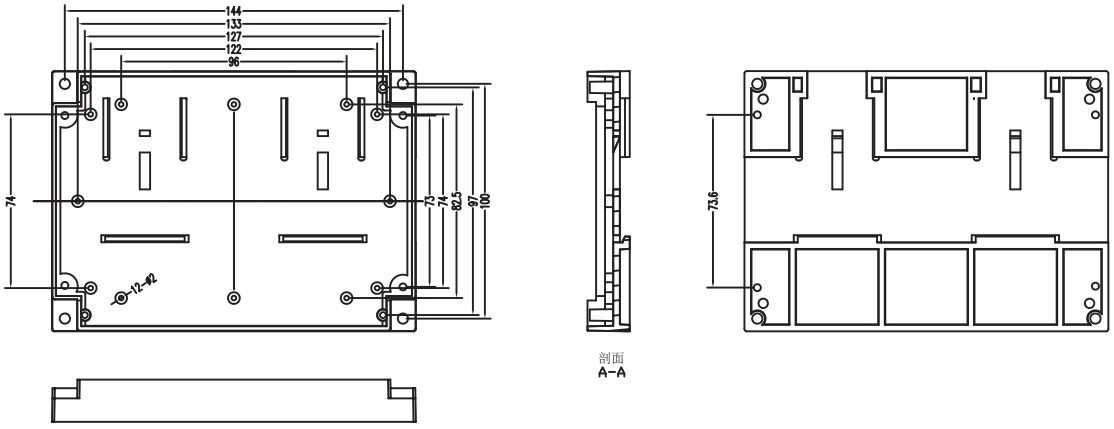

ORDER INFORMATION

Product NO.: KLS24-JG3-07

Pos. NO. — No.