KLS electronic
www.cnkls.com

PLC housing

KLS24-JG3-22 120*80*64mm PLC housing, gray

Product Description:

*Productor Material: ABS
*Widely used in various PLC module circuit, a controller unit, with electrical module
*Product Standard accessories: cap, base, retainer a long cover 2
*Box body with the hook connection, tool-free installation
*Holds up two PCB
*Product side terminal Optional:
Pitch terminal unilateral 19P 5.0, a total of 38P

*Two installation methods:
(1) screws
(2) fast and simple rail mounting
*Fully insulated protection
*Good heat dissipation
*Product color and material batch can be customized
*Product cover may require modification

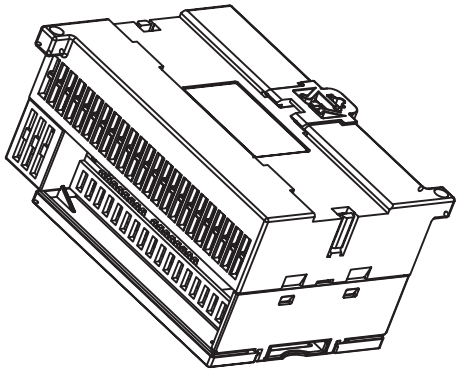

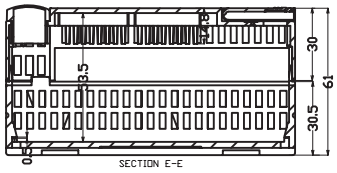

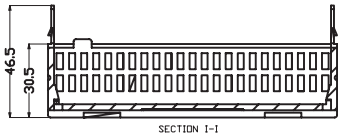

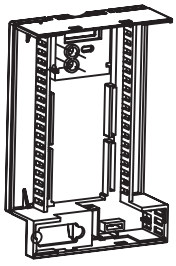

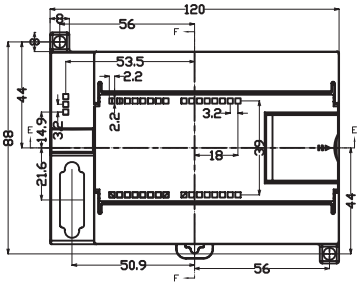

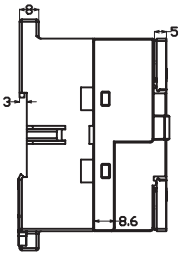

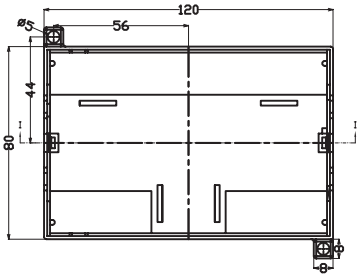

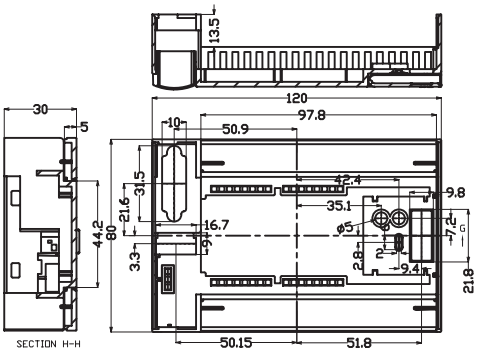

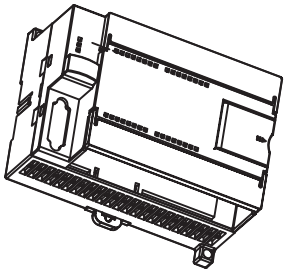

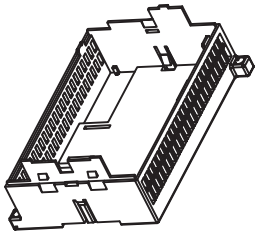

ORDER INFORMATION

Product NO.: KLS24-JG3-22

Pos. NO. — No.