KLS electronic
www.cnkls.com

Digital, desktop generic shell

KLS24-JG5-01-2 Size:86*86*26mm

Product Description:

*Productor Material: ABS
* Adapt to climate control, remote control switch boxes
* Product Standard accessories: cap, base
* Box body with the hook-type connection, tool-free installation
* Screen size is 65 * 48MM,
* Color and villages bulk material can be customized
* Product cover may require modification

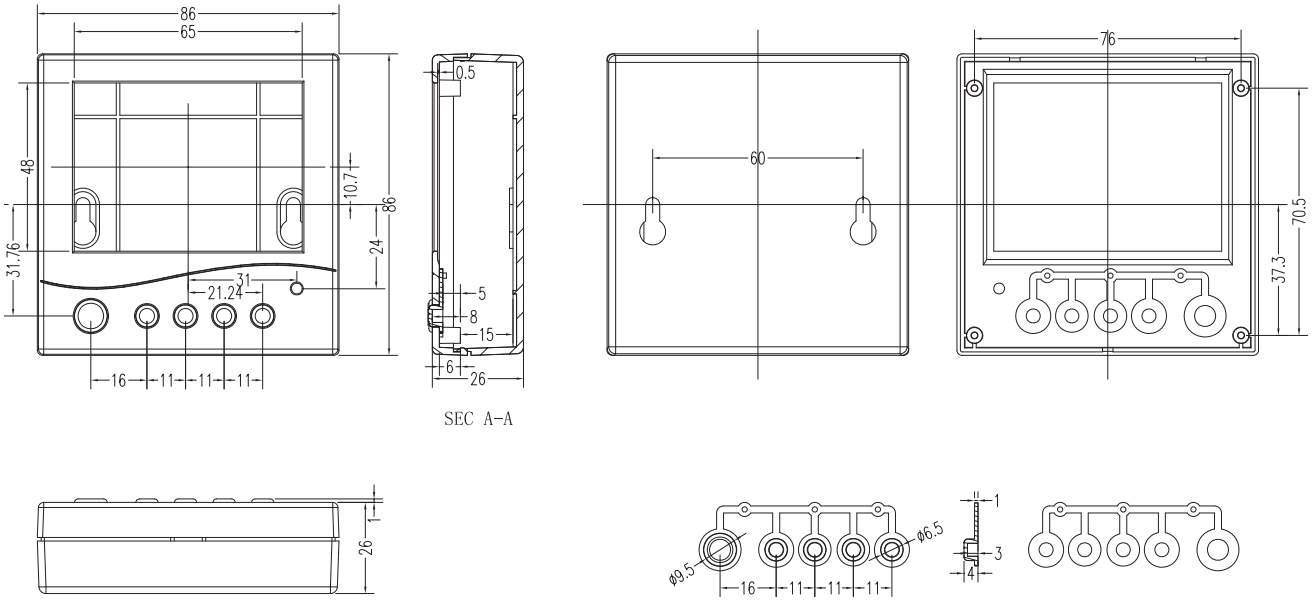

ORDER INFORMATION

Product NO.: KLS24-JG5-01-2

Pos. NO. — No.