KLS electronic
www.cnkls.com

I

## Digital, desktop generic shell

KLS24-JG5-41 Size:48*96mm

**Product Description:**

* Adapt to all types of multi-function three-phase power meter, digital temperature instruments, intelligent instruments mounted cabinet
* Product panel 48 * 48mm, Dimensions: 48 * 80 * 44mm hole: 45 * 45mm
* Product Standard accessories: panel housing, two mounting pieces, two screws
* Color and villages bulk material can be customized
* This product is free to arrange LCD screen, digital control, lights and other layout, a plurality of key-hole design

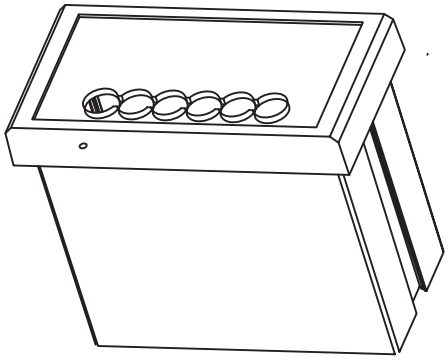

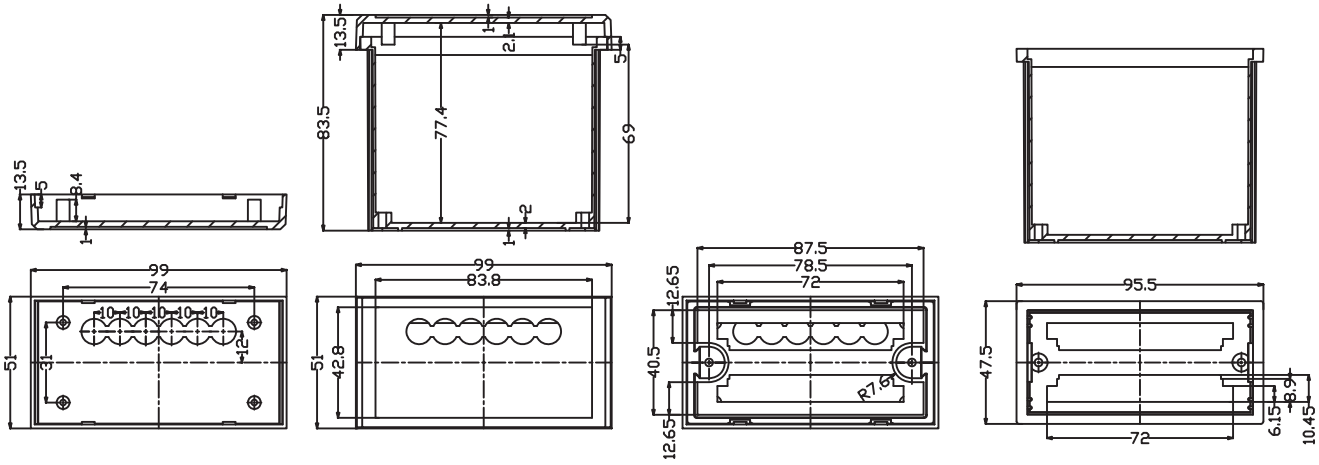


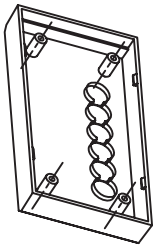

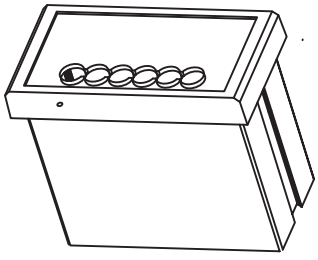

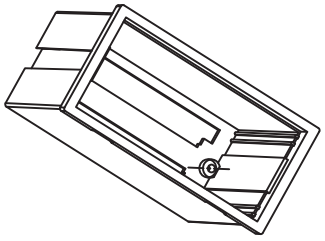

## ORDER INFORMATION

Product NO.: KLS24-JG5-41

Pos. NO. — No.