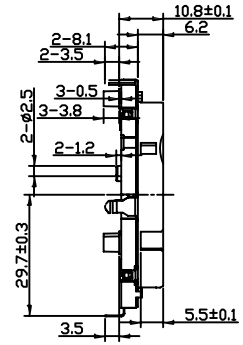

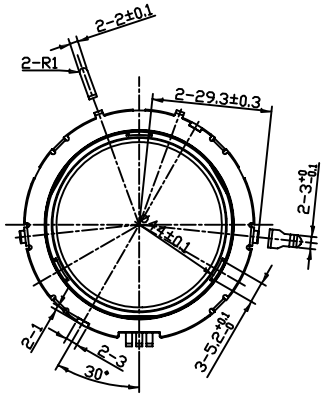

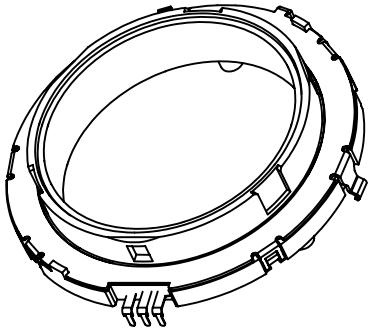

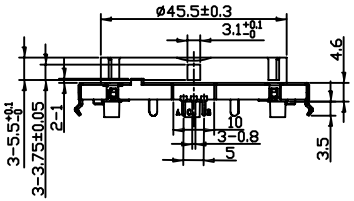

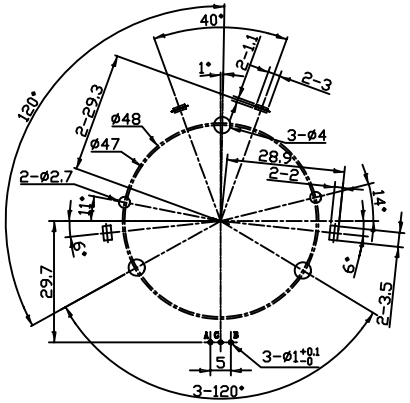

PCB LAYOUT

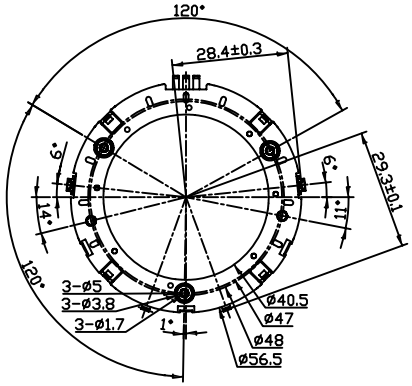

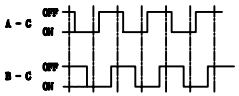

OUTPUT SIGNAL
(CW ROTATION)

Electrical Characteristics

Rated Power:	DC5V 10mA Max.
Output signal:	A \ B 2 signals
Resolution:	15 Pulses 360°
Phase difference:	0.08T Min.
Sliding noise:	3mS Max.
Contact Resistance:	1 Ω Max.
Insulation resistance:	100MΩ Min. at DC 250V
Withstand voltage:	AC300V / 1 min

Mechanical

Total rotation angle:	360°
Detent Torque:	150±50gf.cm
Push-pull Strength of Shaft:	8.0kgf Min.
Number of Detents(Click):	30 detents Step angle:12°±2°
Shaft play in axial direction:	0.3mm Max.
shaft play in rotational wobble:	2° Max.
Rotational Life:	30000±200 cycles
Temp. Range:	-40 °C ~ + 85 °C
Soldering:	250 °C 5Sec. Max.

GENERAL TOLERANCE	ANGLE TOLERANCE	PROJECTION		Description:
X. ±0.50	X. ±5°	UNITS	mm	56MM Ring type Encoder
.X ±0.38	.X ±3°	SHEET SIZE	A4	
.XX ±0.25	.XX ±2°		KLS P/N:	KLS4-RT5601
Draw by: Date	2015-09-01			
Check by:: Date	2015-09-15			
SCALE	SHEET	OF		

KLS ELECTRONIC CO ., LTD.