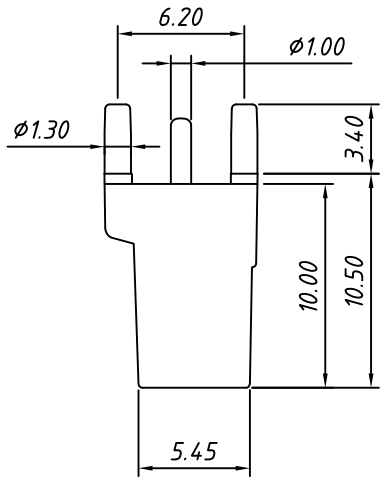

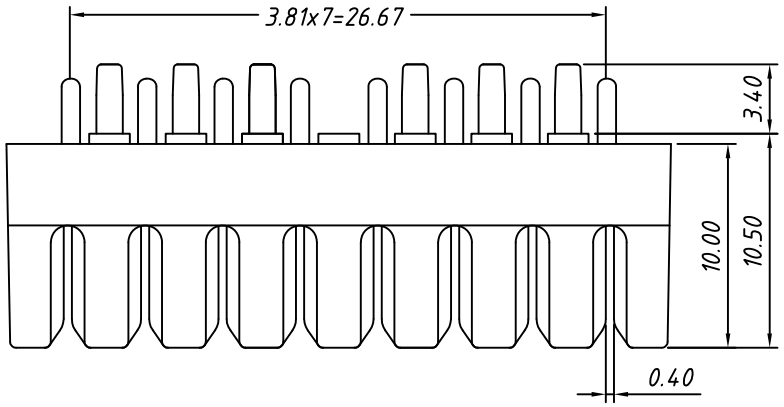

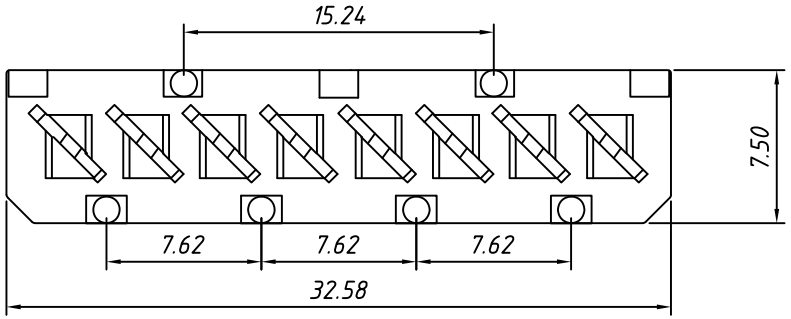

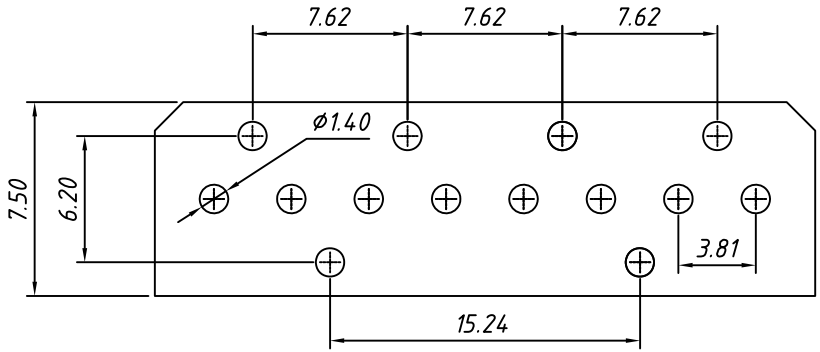

PCB LAYOUT

Tol:±0.05mm

Material:
Housing: PC
Flammability Rating : UL94V-2
Contacts: Phosphor Bronze T=0.50mm
Plating: TIN Plating

Electrical:
Voltage Rating: 125VAC
Current Rating: 1.5A
Contact Resistance: 30mΩ Max.
Insulation Resistance: 500MΩ Min. at 500V dc
Dielectric Strength: 1000VAC Rms 50Hz,1 Min.
Durability: 750 cycles Min.
Operation Temperature:-40°C~+85°C

Order Information

L-KLS12-CM-05 -XX

RoHS

Contacts:

02- 1 Pair IDC Connector
04- 2 Pair IDC Connector
08- 4 Pair IDC Connector

GENERAL TOLERANCE	PROJECTION		Description:
X. ±0.30	UNITS	mm	Krone IDC Block PCB-PLUS
.X ±0.20	SCALE	1:1	
.XX ±0.15	Draw by:	Daniel	KLS P/N: L-KLS12-CM-05-08
ANGLE TOLERANCE	Check by:	Daniel	
±1°	Date	2020-04-20	NingBo KLS ELECTRONIC CO.,LTD.
	SHEET	1 OF 1	

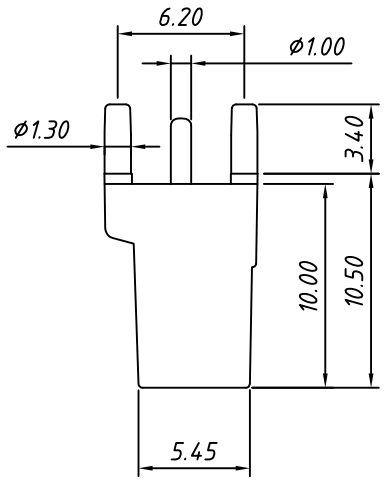

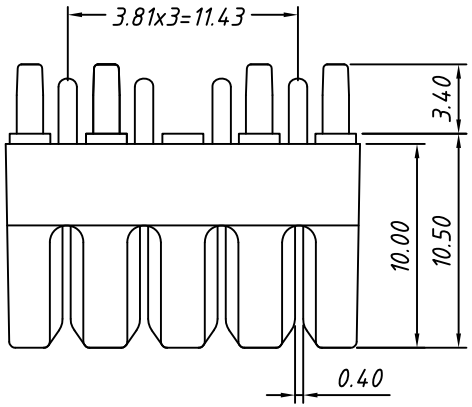

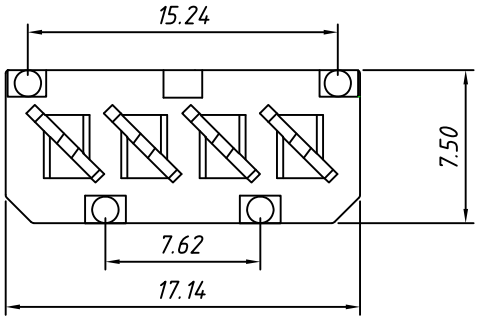

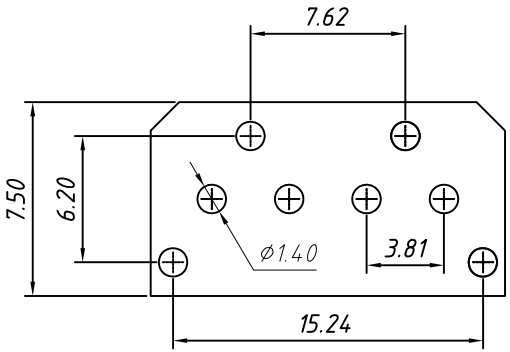

PCB LAYOUT

Tol:±0.05mm

Material:
Housing: PC
Flammability Rating : UL94V-2
Contacts: Phosphor Bronze T=0.50mm
Plating: TIN Plating

Electrical:
Voltage Rating: 125VAC
Current Rating: 1.5A
Contact Resistance: 30mΩ Max.
Insulation Resistance: 500MΩ Min. at 500V dc
Dielectric Strength: 1000VAC Rms 50Hz,1 Min.
Durability: 750 cycles Min.
Operation Temperature:-40°C~+85°C

Order Information

L-KLS12-CM-05 -XX

RoHS

Contacts:
02- 1 Pair IDC Connector
04- 2 Pair IDC Connector
08- 4 Pair IDC Connector

GENERAL TOLERANCE	PROJECTION		Description:
X. ±0.30	UNITS	mm	Krone IDC Block PCB-PLUS
.X ±0.20	SCALE	1:1	
.XX ±0.15	Draw by:	Daniel	KLS P/N: L-KLS12-CM-05-04
ANGLE TOLERANCE	Check by:	Daniel	
±1°	Date	2020-04-20	NingBo KLS ELECTRONIC CO.,LTD.
	SHEET	1 OF 1	

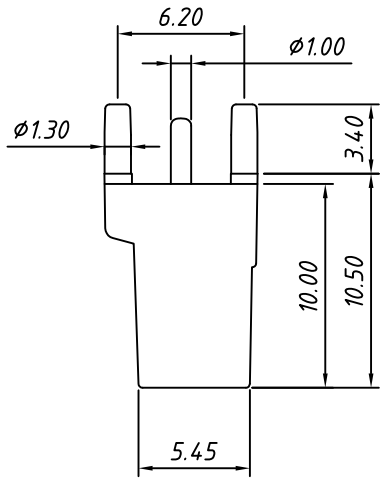

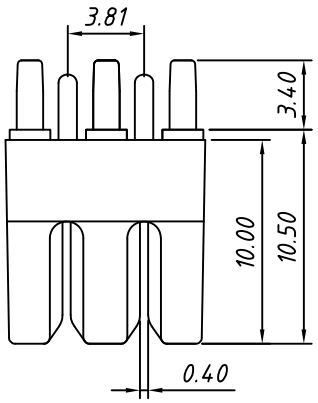

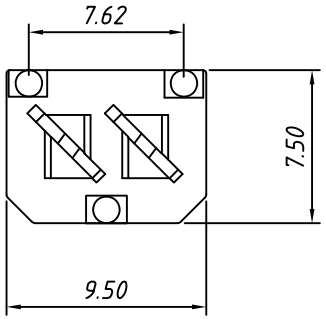

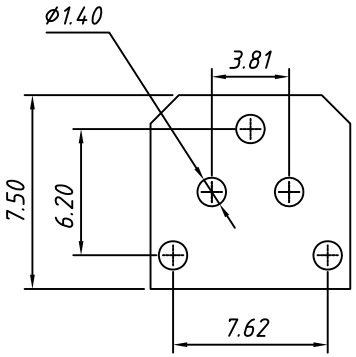

PCB LAYOUT

Tol:±0.05mm

Material:
Housing: PC
Flammability Rating : UL94V-2
Contacts: Phosphor Bronze T=0.50mm
Plating: TIN Plating

Electrical:
Voltage Rating: 125VAC
Current Rating: 1.5A
Contact Resistance: 30mΩ Max.
Insulation Resistance: 500MΩ Min. at 500V dc
Dielectric Strength: 1000VAC Rms 50Hz,1 Min.
Durability: 750 cycles Min.
Operation Temperature:-40°C~+85°C

Order Information

L-KLS12-CM-05 -XX

RoHS

Contacts:

02- 1 Pair IDC Connector
04- 2 Pair IDC Connector
08- 4 Pair IDC Connector

GENERAL TOLERANCE	PROJECTION		Description:
X. ±0.30	UNITS	mm	Krone IDC Block PCB-PLUS
.X ±0.20	SCALE	1:1	
.XX ±0.15	Draw by:	Daniel	KLS P/N: L-KLS12-CM-05-02
ANGLE TOLERANCE	Check by:	Daniel	
±1°	Date	2020-04-20	NingBo KLS ELECTRONIC CO.,LTD.
	SHEET	1 OF 1	