RoHS Compliance

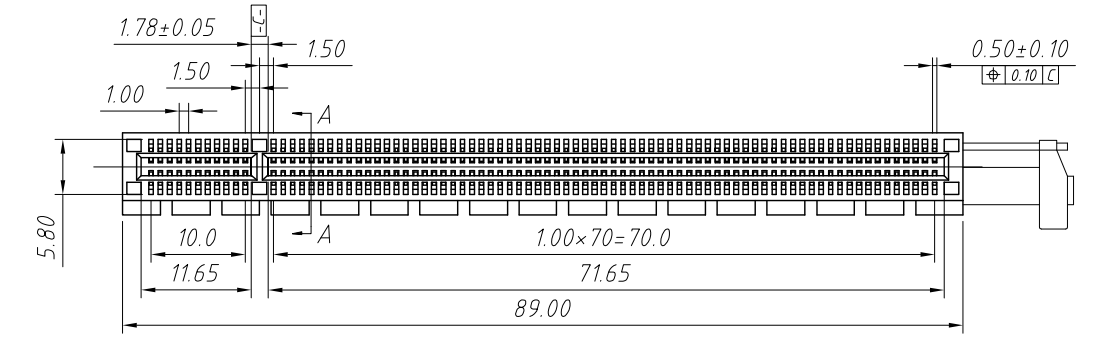

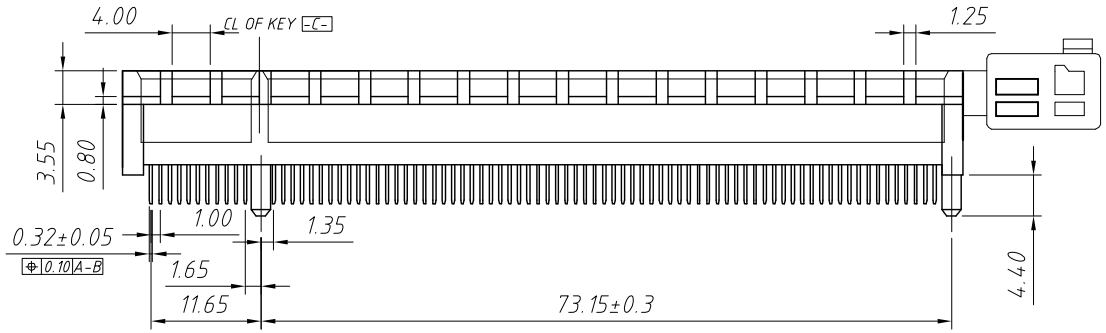

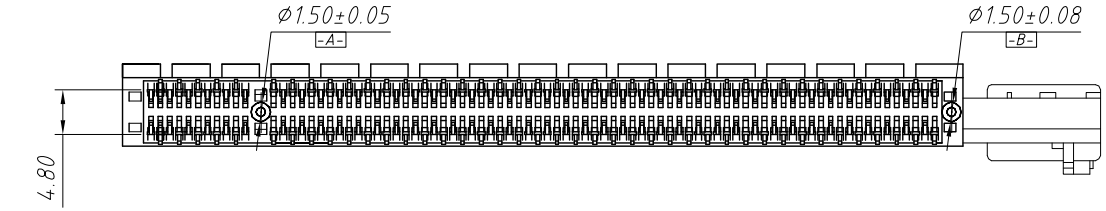

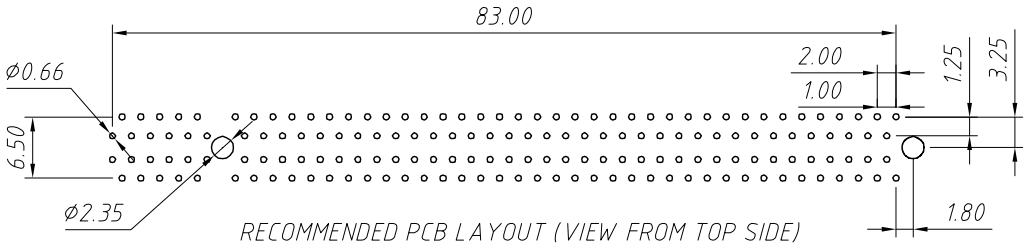

RECOMMENDED PCB LAYOUT (VIEW FROM TOP SIDE)

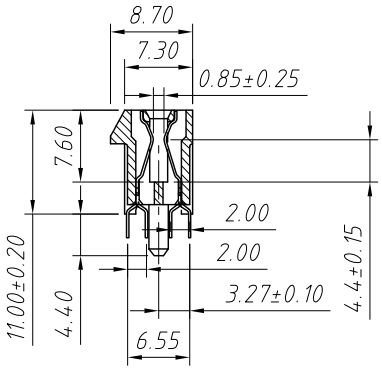

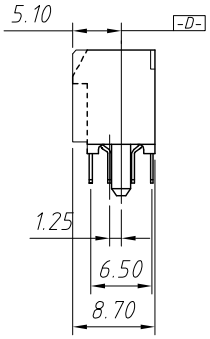

Order Information:

L-KLS1-PCIE05A-164-B-G1U-R

- L: RoHS
- 164-No.of 164pins
- Colour:B-Black
  Y-Yellow L-Blue W-White
- Plating: G1U-Gold 1u"
  G3U-Gold 3u" G30U-Gold 30u"
- Packing:A-Tube C-Tray E-Box

Material:
Housing: PBT/PA66,UL 94 V-0
Contact: Brass
Plating: Gold Plating Over Nickel.

Mechanical
Insertion Forge: 1.15N Max Per Contact Pair
Withdrawal Force: 0.15N Min per contact pair
Contact Retention Force: 4.9N Min Per Contact,

Electrical Specification:
Current Rating: 1.0 AMP
Contact Resistance: 30M Ohm max
Insulator Resistance: 1000M Ohm min. at DC 500V DC
Operating Temperature: -45°C~+105°C

ANGLE TOLERANCE	PROJECTION		Description:	
±3°			1.0mm Pitch PCIE Card Connector 164P	
GENERAL TOLERANCE	UNITS	mm	KLS P/N:	L-KLS1-PCIE05A
x.x ±0.30	SHEET SIZE	A4		
x.xx ±0.20	Draw:	Daniel	2020-11-11	NingBo KLS ELECTRONIC CO.,LTD.
x.xxx ±0.10	Check:	Daniel	2020-11-11	